The University of the State of New York
REGENTS HIGH SCHOOL EXAMINATION

GEOMETRY

Tuesday, June 19, 2018 — 9:15 a.m. to 12:15 p.m., only

Student Name: _____

School Name: _____

The possession or use of any communications device is strictly prohibited when taking this examination. If you have or use any communications device, no matter how briefly, your examination will be invalidated and no score will be calculated for you.

Print your name and the name of your school on the lines above.

A separate answer sheet for **Part I** has been provided to you. Follow the instructions from the proctor for completing the student information on your answer sheet.

This examination has four parts, with a total of 35 questions. You must answer all questions in this examination. Record your answers to the Part I multiple-choice questions on the separate answer sheet. Write your answers to the questions in **Parts II, III,** and **IV** directly in this booklet. All work should be written in pen, except for graphs and drawings, which should be done in pencil. Clearly indicate the necessary steps, including appropriate formula substitutions, diagrams, graphs, charts, etc. Utilize the information provided for each question to determine your answer. Note that diagrams are not necessarily drawn to scale.

The formulas that you may need to answer some questions in this examination are found at the end of the examination. This sheet is perforated so you may remove it from this booklet.

Scrap paper is not permitted for any part of this examination, but you may use the blank spaces in this booklet as scrap paper. A perforated sheet of scrap graph paper is provided at the end of this booklet for any question for which graphing may be helpful but is not required. You may remove this sheet from this booklet. Any work done on this sheet of scrap graph paper will *not* be scored.

When you have completed the examination, you must sign the statement printed at the end of the answer sheet, indicating that you had no unlawful knowledge of the questions or answers prior to the examination and that you have neither given nor received assistance in answering any of the questions during the examination. Your answer sheet cannot be accepted if you fail to sign this declaration.

Notice…
A graphing calculator, a straightedge (ruler), and a compass must be available for you to use while taking this examination.

DO NOT OPEN THIS EXAMINATION BOOKLET UNTIL THE SIGNAL IS GIVEN.

mynotes

Part I

Answer all 24 questions in this part. Each correct answer will receive 2 credits. No partial credit will be allowed. Utilize the information provided for each question to determine your answer. Note that diagrams are not necessarily drawn to scale. For each statement or question, choose the word or expression that, of those given, best completes the statement or answers the question. Record your answers on your separate answer sheet. [48]

Use this space for computations.

1 After a counterclockwise rotation about point X, scalene triangle ABC maps onto $\triangle RST$, as shown in the diagram below.

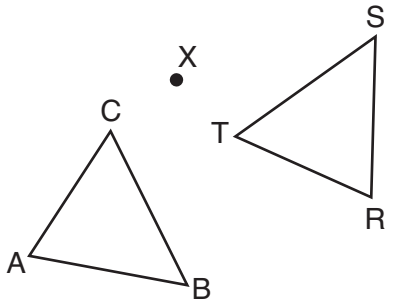

Which statement must be true?

(1) $\angle A \cong \angle R$

(2) $\angle A \cong \angle S$

(3) $\overline{CB} \cong \overline{TR}$

(4) $\overline{CA} \cong \overline{TS}$

2 In the diagram below, $\overline{AB} \parallel \overline{DEF}$, $\overline{AE}$ and $\overline{BD}$ intersect at C, $m\angle B = 43°$, and $m\angle CEF = 152°$.

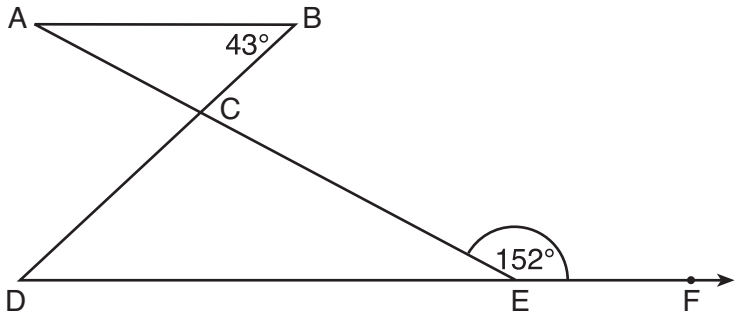

Which statement is true?

(1) $m\angle D = 28°$

(2) $m\angle A = 43°$

(3) $m\angle ACD = 71°$

(4) $m\angle BCE = 109°$

mynotes

Use this space for computations.

3 In the diagram below, line m is parallel to line n. Figure 2 is the image of Figure 1 after a reflection over line m. Figure 3 is the image of Figure 2 after a reflection over line n.

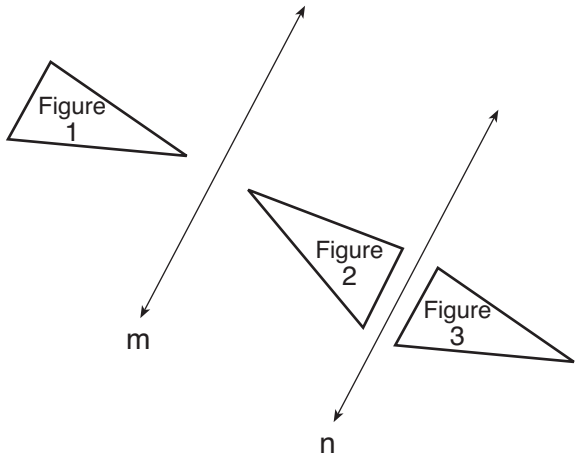

Which single transformation would carry Figure 1 onto Figure 3?

(1) a dilation
(2) a rotation
(3) a reflection
(4) a translation

4 In the diagram below, $\overline{AF}$ and $\overline{DB}$ intersect at C, and $\overline{AD}$ and $\overline{FBE}$ are drawn such that $m\angle D = 65°$, $m\angle CBE = 115°$, $DC = 7.2$, $AC = 9.6$, and $FC = 21.6$.

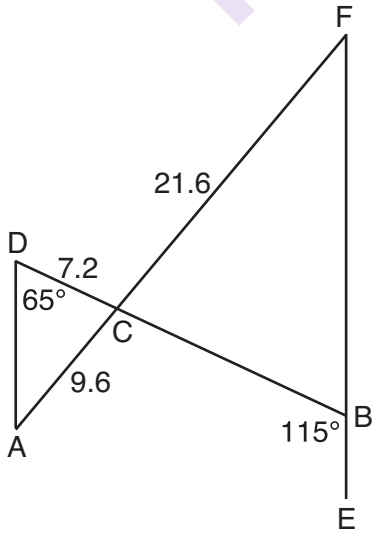

What is the length of $\overline{CB}$?

(1) 3.2
(2) 4.8
(3) 16.2
(4) 19.2

mynotes

Use this space for computations.

5 Given square $RSTV$, where $RS = 9$ cm. If square $RSTV$ is dilated by a scale factor of 3 about a given center, what is the perimeter, in centimeters, of the image of $RSTV$ after the dilation?

(1) 12
(2) 27
(3) 36
(4) 108

6 In right triangle ABC, hypotenuse $\overline{AB}$ has a length of 26 cm, and side $\overline{BC}$ has a length of 17.6 cm. What is the measure of angle B, to the *nearest degree*?

(1) 48°
(2) 47°
(3) 43°
(4) 34°

7 The greenhouse pictured below can be modeled as a rectangular prism with a half-cylinder on top. The rectangular prism is 20 feet wide, 12 feet high, and 45 feet long. The half-cylinder has a diameter of 20 feet.

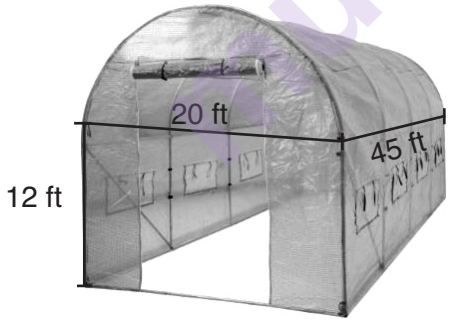

To the *nearest cubic foot*, what is the volume of the greenhouse?

(1) 17,869
(2) 24,937
(3) 39,074
(4) 67,349

Use this space for computations.

8 In a right triangle, the acute angles have the relationship $\sin(2x + 4) = \cos(46)$.

What is the value of x?

(1) 20
(2) 21
(3) 24
(4) 25

9 In the diagram below, $\overline{AB} \parallel \overline{DFC}$, $\overline{EDA} \parallel \overline{CBG}$, and $\overline{EFB}$ and $\overline{AG}$ are drawn.

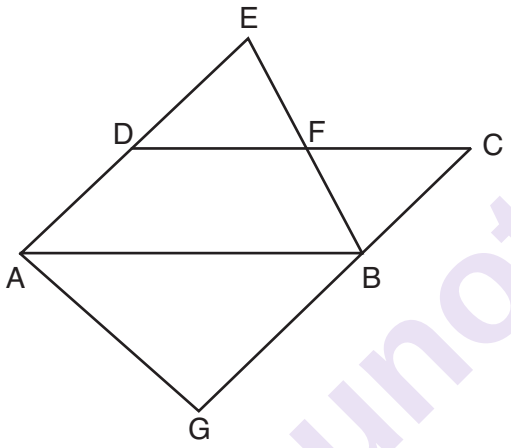

Which statement is always true?

(1) $\triangle DEF \cong \triangle CBF$
(2) $\triangle BAG \cong \triangle BAE$
(3) $\triangle BAG \sim \triangle AEB$
(4) $\triangle DEF \sim \triangle AEB$

10 The base of a pyramid is a rectangle with a width of 4.6 cm and a length of 9 cm. What is the height, in centimeters, of the pyramid if its volume is 82.8 cm^3?

(1) 6
(2) 2
(3) 9
(4) 18

munotes

Use this space for computations.

11 In the diagram below of right triangle AED, $\overline{BC} \parallel \overline{DE}$.

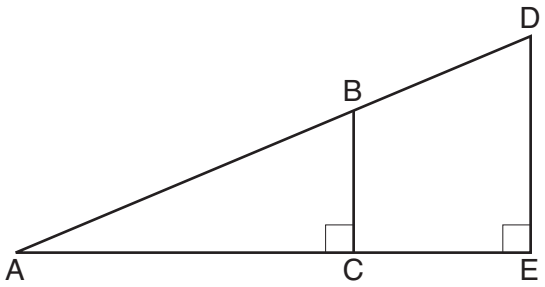

Which statement is always true?

(1) $\frac{AC}{BC} = \frac{DE}{AE}$

(2) $\frac{AB}{AD} = \frac{BC}{DE}$

(3) $\frac{AC}{CE} = \frac{BC}{DE}$

(4) $\frac{DE}{BC} = \frac{DB}{AB}$

12 What is an equation of the line that passes through the point (6,8) and is perpendicular to a line with equation $y = \frac{3}{2}x + 5$?

(1) $y - 8 = \frac{3}{2}(x - 6)$

(2) $y - 8 = -\frac{2}{3}(x - 6)$

(3) $y + 8 = \frac{3}{2}(x + 6)$

(4) $y + 8 = -\frac{2}{3}(x + 6)$

mynotes

Use this space for computations.

13 The diagram below shows parallelogram $ABCD$ with diagonals $\overline{AC}$ and $\overline{BD}$ intersecting at E.

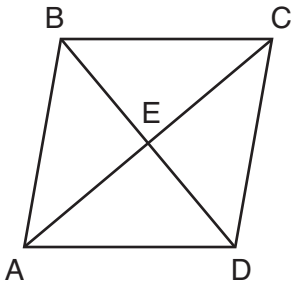

What additional information is sufficient to prove that parallelogram $ABCD$ is also a rhombus?

(1) $\overline{BD}$ bisects $\overline{AC}$.

(2) $\overline{AB}$ is parallel to $\overline{CD}$.

(3) $\overline{AC}$ is congruent to $\overline{BD}$.

(4) $\overline{AC}$ is perpendicular to $\overline{BD}$.

14 Directed line segment DE has endpoints $D(-4,-2)$ and $E(1,8)$. Point F divides $\overline{DE}$ such that $DF:FE$ is 2:3. What are the coordinates of F?

(1) $(-3,0)$

(2) $(-2,2)$

(3) $(-1,4)$

(4) $(2,4)$

mynotes

Use this space for computations.

15 Triangle DAN is graphed on the set of axes below. The vertices of $\triangle DAN$ have coordinates $D(-6,-1)$, $A(6,3)$, and $N(-3,10)$.

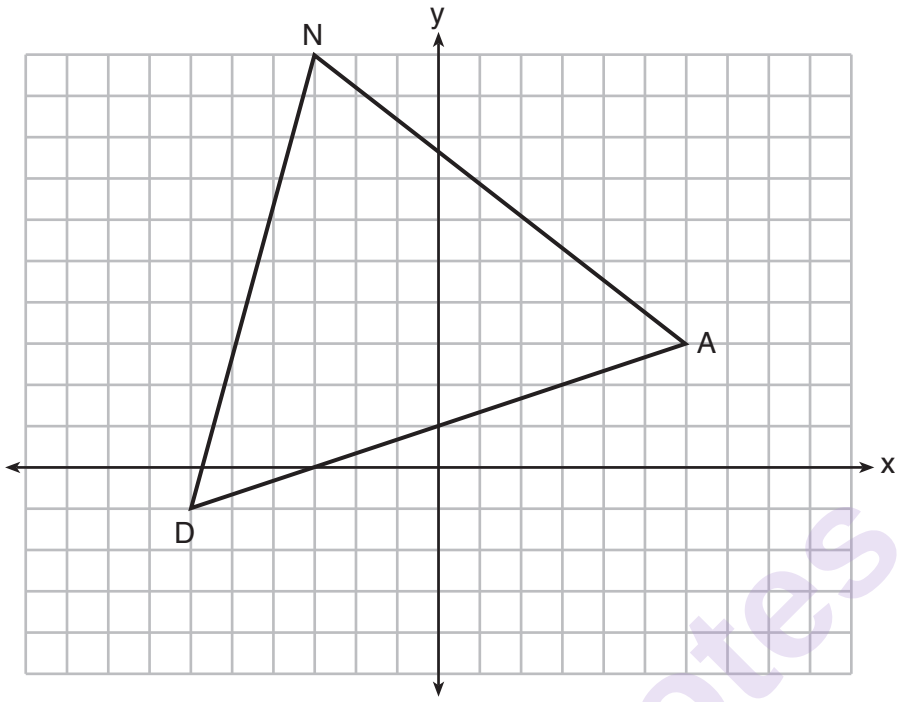

What is the area of $\triangle DAN$?

(1) 60

(2) 120

(3) $20\sqrt{13}$

(4) $40\sqrt{13}$

mynotes

Use this space for computations.

16 Triangle ABC, with vertices at $A(0,0)$, $B(3,5)$, and $C(0,5)$, is graphed on the set of axes shown below.

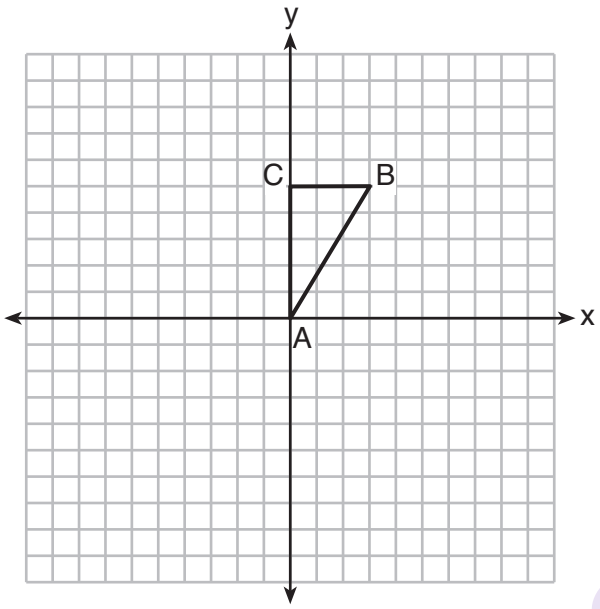

Which figure is formed when $\triangle ABC$ is rotated continuously about $\overline{BC}$?

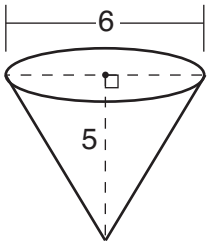

(1)

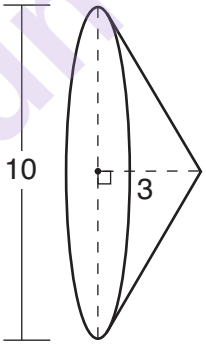

(3)

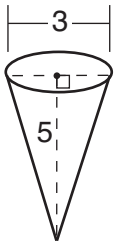

(2)

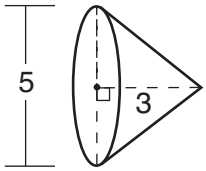

(4)

munotes

Use this space for computations.

17 In the diagram below of circle O, chords $\overline{AB}$ and $\overline{CD}$ intersect at E.

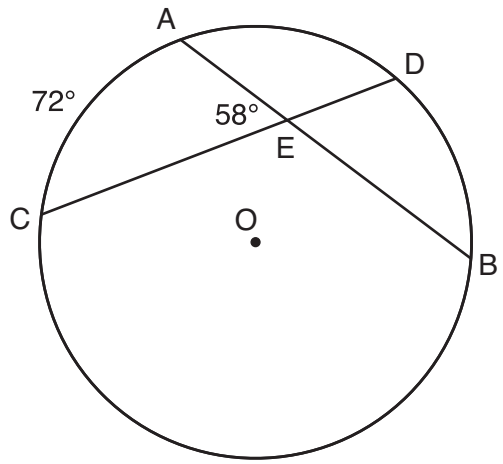

If $m\overset{\frown}{AC} = 72°$ and $m\angle AEC = 58°$, how many degrees are in $m\overset{\frown}{DB}$?

(1) 108°

(2) 65°

(3) 44°

(4) 14°

18 In triangle SRK below, medians $\overline{SC}$, $\overline{KE}$, and $\overline{RL}$ intersect at M.

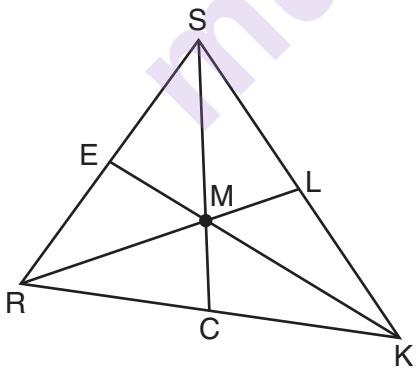

Which statement must always be true?

(1) $3(MC) = SC$

(2) $MC = \frac{1}{3}(SM)$

(3) $RM = 2MC$

(4) $SM = KM$

mynotes

Use this space for computations.

19 The regular polygon below is rotated about its center.

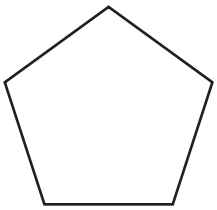

Which angle of rotation will carry the figure onto itself?

(1) 60°
(2) 108°
(3) 216°
(4) 540°

20 What is an equation of circle O shown in the graph below?

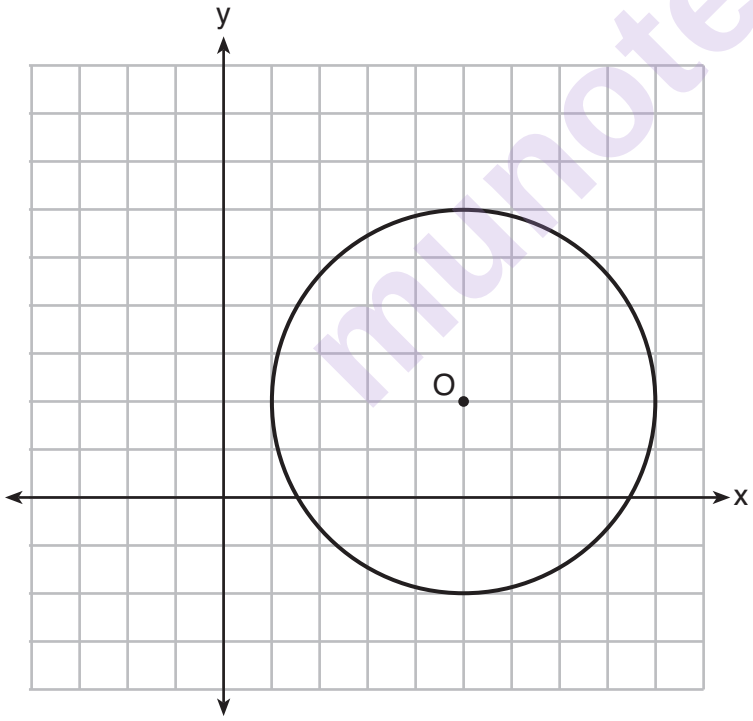

(1) $x^2 + 10x + y^2 + 4y = -13$
(2) $x^2 - 10x + y^2 - 4y = -13$
(3) $x^2 + 10x + y^2 + 4y = -25$
(4) $x^2 - 10x + y^2 - 4y = -25$

mynotes

Use this space for computations.

21 In the diagram below of $\triangle PQR$, $\overline{ST}$ is drawn parallel to $\overline{PR}$, $PS = 2$, $SQ = 5$, and $TR = 5$.

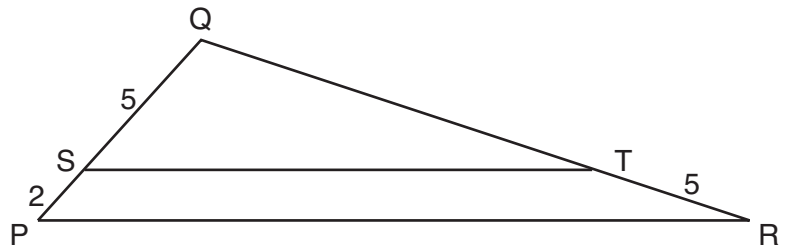

What is the length of $\overline{QR}$?

(1) 7

(2) 2

(3) $12\frac{1}{2}$

(4) $17\frac{1}{2}$

22 The diagram below shows circle O with radii $\overline{OA}$ and $\overline{OB}$. The measure of angle AOB is 120°, and the length of a radius is 6 inches.

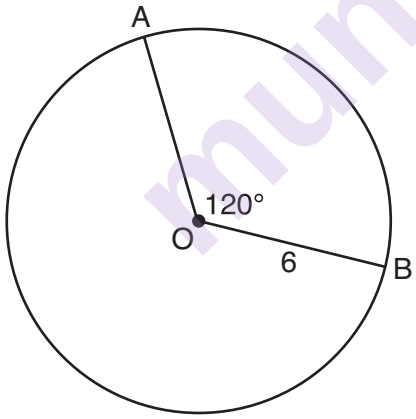

Which expression represents the length of arc AB, in inches?

(1) $\frac{120}{360}(6\pi)$

(2) $120(6)$

(3) $\frac{1}{3}(36\pi)$

(4) $\frac{1}{3}(12\pi)$

mynotes

Use this space for computations.

23 Line segment CD is the altitude drawn to hypotenuse $\overline{EF}$ in right triangle ECF. If $EC = 10$ and $EF = 24$, then, to the *nearest tenth*, ED is

(1) 4.2
(2) 5.4
(3) 15.5
(4) 21.8

24 Line MN is dilated by a scale factor of 2 centered at the point (0,6). If $\overleftrightarrow{MN}$ is represented by $y = -3x + 6$, which equation can represent $\overleftrightarrow{M'N'}$, the image of $\overleftrightarrow{MN}$?

(1) $y = -3x + 12$
(2) $y = -3x + 6$
(3) $y = -6x + 12$
(4) $y = -6x + 6$

munotes

Part II

Answer all 7 questions in this part. Each correct answer will receive 2 credits. Clearly indicate the necessary steps, including appropriate formula substitutions, diagrams, graphs, charts, etc. Utilize the information provided for each question to determine your answer. Note that diagrams are not necessarily drawn to scale. For all questions in this part, a correct numerical answer with no work shown will receive only 1 credit. All answers should be written in pen, except for graphs and drawings, which should be done in pencil. [14]

25 Triangle $A'B'C'$ is the image of triangle ABC after a translation of 2 units to the right and 3 units up. Is triangle ABC congruent to triangle $A'B'C'$? Explain why.

munotes

26 Triangle ABC and point $D(1,2)$ are graphed on the set of axes below.

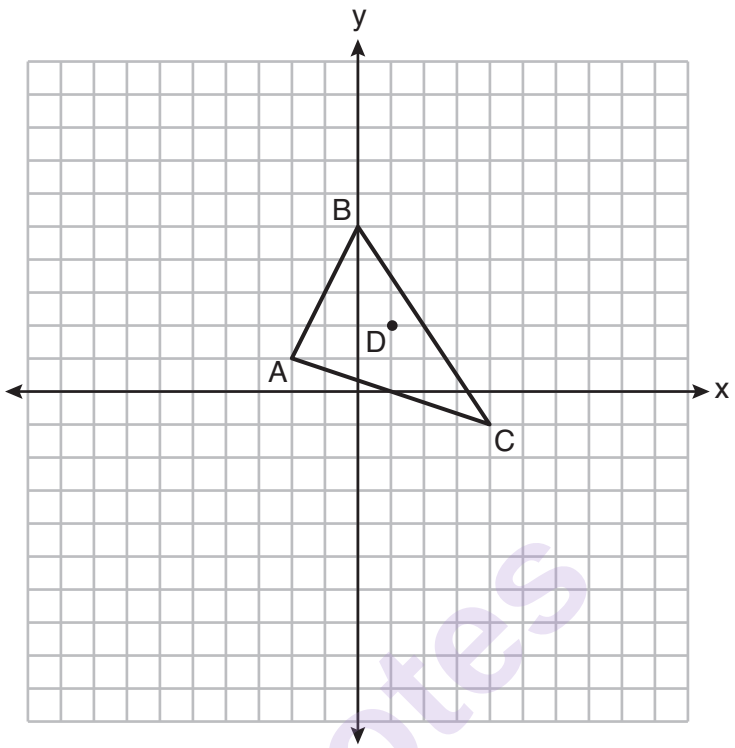

Graph and label $\triangle A'B'C'$, the image of $\triangle ABC$, after a dilation of scale factor 2 centered at point D.

munotes

27 Quadrilaterals *BIKE* and *GOLF* are graphed on the set of axes below.

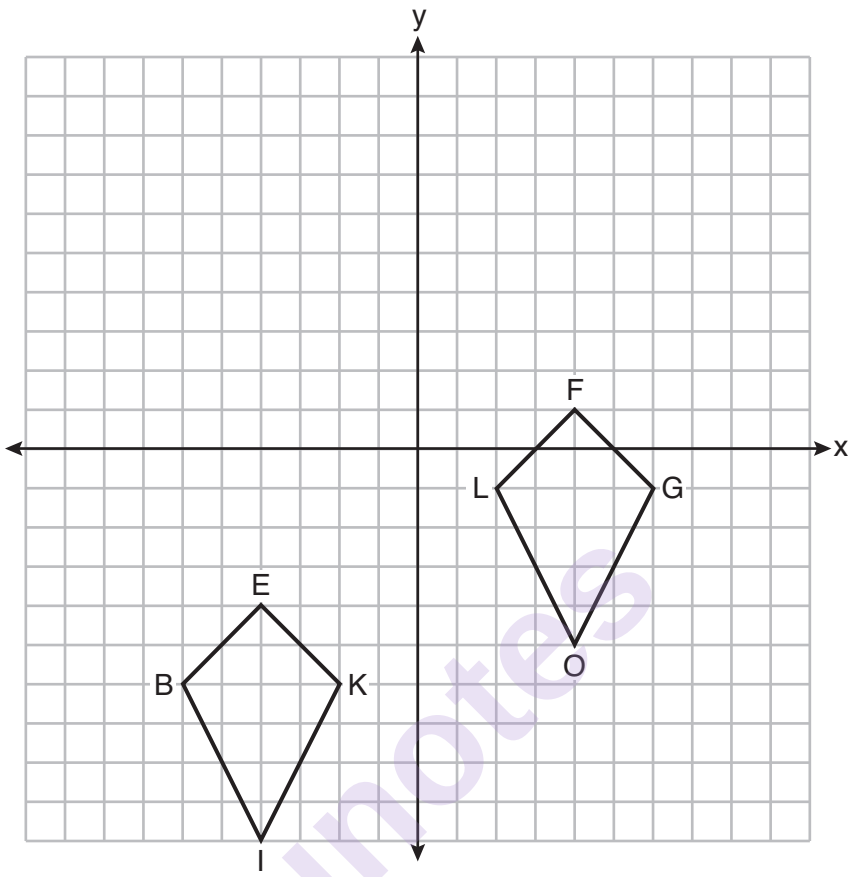

Describe a sequence of transformations that maps quadrilateral *BIKE* onto quadrilateral *GOLF*.

mynotes

28 In the diagram below, secants $\overline{RST}$ and $\overline{RQP}$, drawn from point R, intersect circle O at S, T, Q, and P.

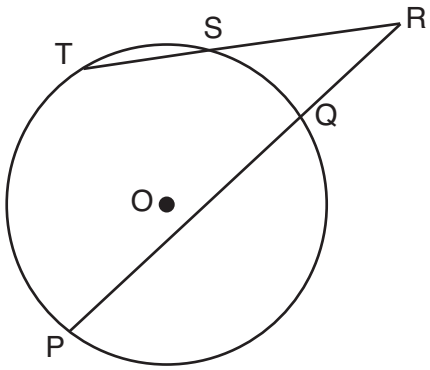

If $RS = 6$, $ST = 4$, and $RP = 15$, what is the length of $\overline{RQ}$?

munotes

29 Using a compass and straightedge, construct the median to side $\overline{AC}$ in $\triangle ABC$ below. [Leave all construction marks.]

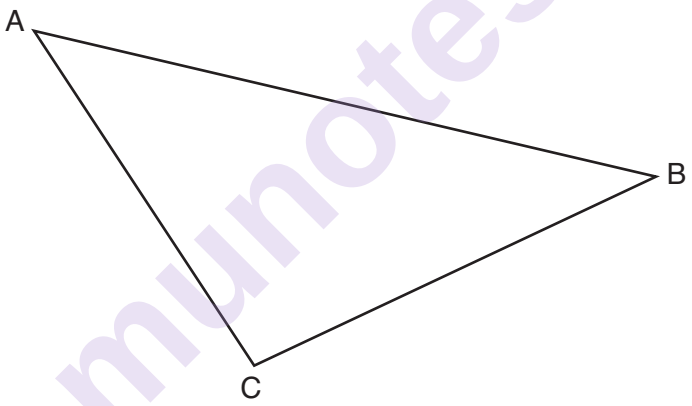

mynotes

30 Skye says that the two triangles below are congruent. Margaret says that the two triangles are similar.

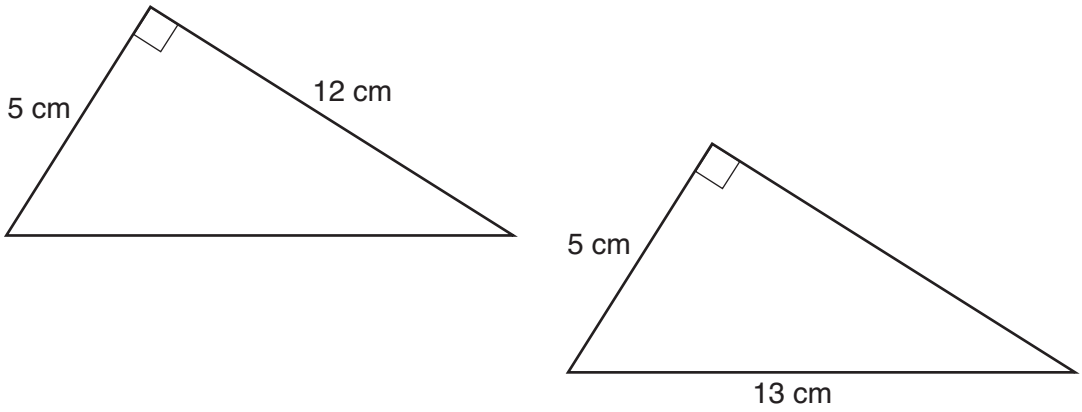

Are Skye and Margaret both correct? Explain why.

munotes

31 Randy's basketball is in the shape of a sphere with a maximum circumference of 29.5 inches. Determine and state the volume of the basketball, to the *nearest cubic inch*.

munotes

Part III

Answer all 3 questions in this part. Each correct answer will receive 4 credits. Clearly indicate the necessary steps, including appropriate formula substitutions, diagrams, graphs, charts, etc. Utilize the information provided for each question to determine your answer. Note that diagrams are not necessarily drawn to scale. For all questions in this part, a correct numerical answer with no work shown will receive only 1 credit. All answers should be written in pen, except for graphs and drawings, which should be done in pencil. [12]

32 Triangle ABC has vertices with coordinates $A(-1,-1)$, $B(4,0)$, and $C(0,4)$. Prove that $\triangle ABC$ is an isosceles triangle but *not* an equilateral triangle. [The use of the set of axes below is optional.]

mynotes

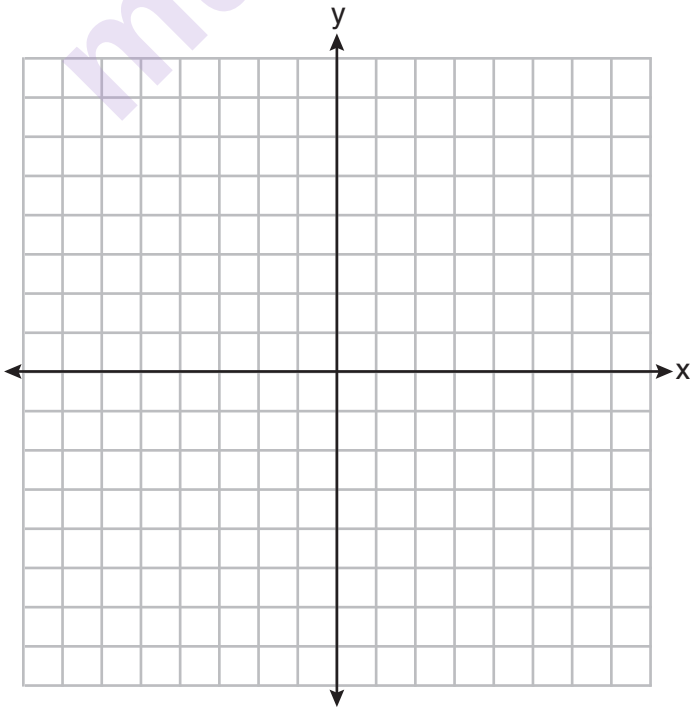

33 The map of a campground is shown below. Campsite C, first aid station F, and supply station S lie along a straight path. The path from the supply station to the tower, T, is perpendicular to the path from the supply station to the campsite. The length of path $\overline{FS}$ is 400 feet. The angle formed by path $\overline{TF}$ and path $\overline{FS}$ is 72°. The angle formed by path $\overline{TC}$ and path $\overline{CS}$ is 55°.

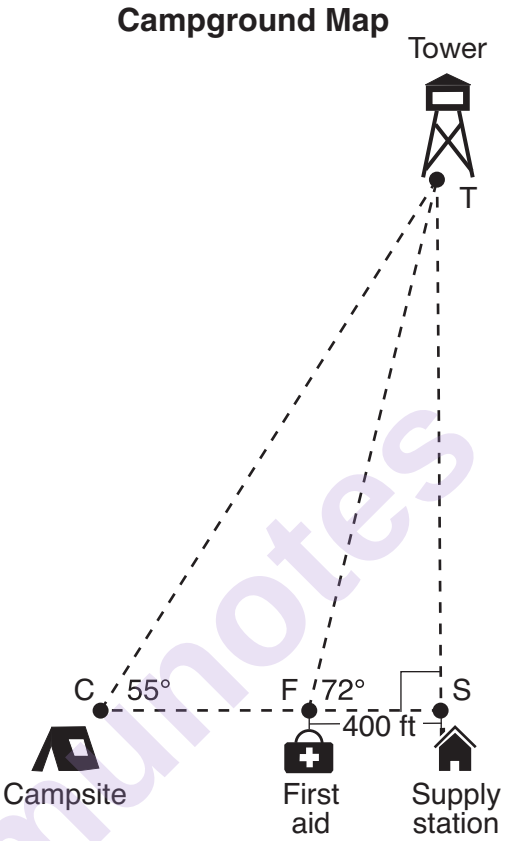

Determine and state, to the *nearest foot*, the distance from the campsite to the tower.

mynotes

34 Shae has recently begun kickboxing and purchased training equipment as modeled in the diagram below. The total weight of the bag, pole, and unfilled base is 270 pounds. The cylindrical base is 18 inches tall with a diameter of 20 inches. The dry sand used to fill the base weighs 95.46 lbs per cubic foot.

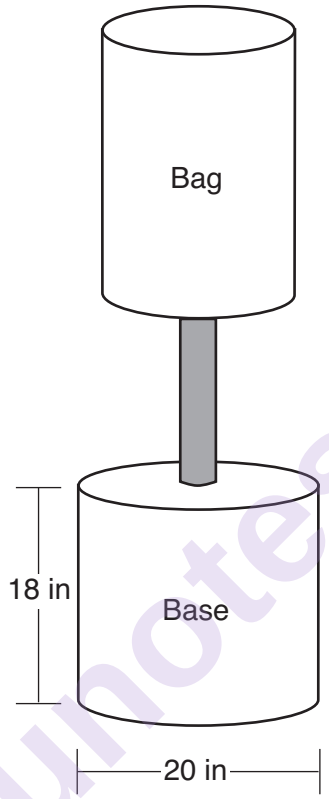

To the *nearest pound*, determine and state the total weight of the training equipment if the base is filled to 85% of its capacity.

mynotes

Part IV

Answer the question in this part. A correct answer will receive 6 credits. Clearly indicate the necessary steps, including appropriate formula substitutions, diagrams, graphs, charts, etc. Utilize the information provided for the question to determine your answer. Note that diagrams are not necessarily drawn to scale. A correct numerical answer with no work shown will receive only 1 credit. All answers should be written in pen, except for graphs and drawings, which should be done in pencil. [6]

35 Given: Parallelogram $ABCD$, $\overline{BF} \perp \overline{AFD}$, and $\overline{DE} \perp \overline{BEC}$

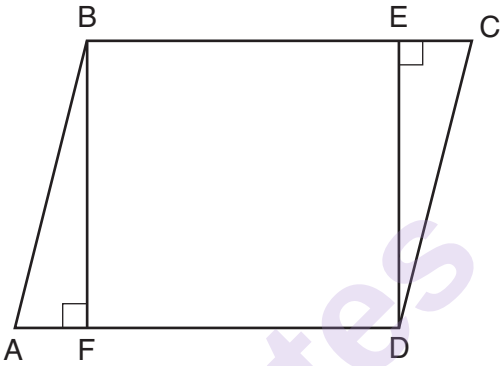

Prove: $BEDF$ is a rectangle

munotes

Work space for question 35 is continued on the next page.

Question 35 continued

munotes

munotes

munotes

munotes

Tear Here

Tear Here

Scrap Graph Paper — This sheet will *not* be scored.

munotes

Scrap Graph Paper — This sheet will *not* be scored.

munotes

Tear Here

Tear Here

Tear Here

High School Math Reference Sheet

1 inch = 2.54 centimeters
1 meter = 39.37 inches
1 mile = 5280 feet
1 mile = 1760 yards
1 mile = 1.609 kilometers

1 kilometer = 0.62 mile
1 pound = 16 ounces
1 pound = 0.454 kilogram
1 kilogram = 2.2 pounds
1 ton = 2000 pounds

1 cup = 8 fluid ounces
1 pint = 2 cups
1 quart = 2 pints
1 gallon = 4 quarts
1 gallon = 3.785 liters
1 liter = 0.264 gallon
1 liter = 1000 cubic centimeters

Triangle	$A = \frac{1}{2}bh$
Parallelogram	$A = bh$
Circle	$A = \pi r^2$
Circle	$C = \pi d$ or $C = 2\pi r$
General Prisms	$V = Bh$
Cylinder	$V = \pi r^2 h$
Sphere	$V = \frac{4}{3}\pi r^3$
Cone	$V = \frac{1}{3}\pi r^2 h$
Pyramid	$V = \frac{1}{3}Bh$

Pythagorean Theorem	$a^2 + b^2 = c^2$
Quadratic Formula	$x = \frac{-b \pm \sqrt{b^2 - 4ac}}{2a}$
Arithmetic Sequence	$a_n = a_1 + (n - 1)d$
Geometric Sequence	$a_n = a_1 r^{n-1}$
Geometric Series	$S_n = \frac{a_1 - a_1 r^n}{1 - r}$ where $r \neq 1$
Radians	1 radian $= \frac{180}{\pi}$ degrees
Degrees	1 degree $= \frac{\pi}{180}$ radians
Exponential Growth/Decay	$A = A_0 e^{k(t - t_0)} + B_0$

munotes

Tear Here

munotes

Tear Here

Tear Here

Printed on Recycled Paper